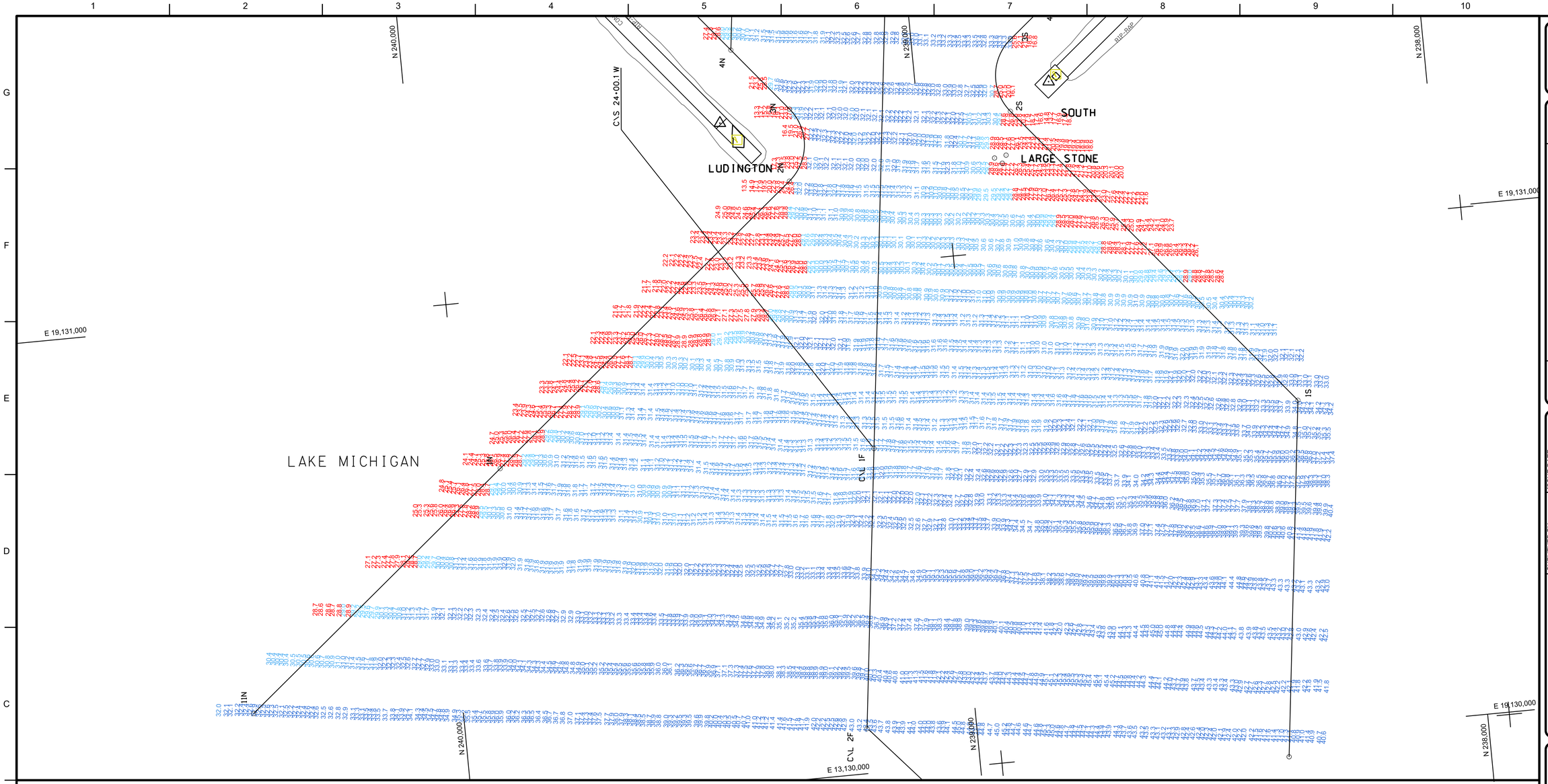

ALL SOUNDINGS ARE REFERENCED TO I.G.L.D. 1985 FOR LAKE MICHIGAN, ELEVATION 577.5 FT. ABOVE MEAN SEA LEVEL AT RIMOUSKI, QUEBEC.
HYDRAULIC CORRECTOR OF 0.3 APPLIED

GRID SYSTEM BASED ON LAMBERT PROJECTION, MICHIGAN STATE PLANE COORDINATE SYSTEM, CENTRAL ZONE (2112) 1983 NORTH AMERICAN DATUM, U.S. FOOT.

THE INFORMATION DEPICTED ON THIS MAP REPRESENTS THE RESULTS OF SURVEYS MADE ON THE DATES INDICATED AND CAN ONLY BE CONSIDERED AS INDICATING THE GENERAL CONDITIONS EXISTING AT THAT TIME.

SURVEYED ON: 20-SEPTEMBER-2019
VERTICAL WATER LEVEL MEASURED AT NOAA GAGE STATION
POSITIONING METHOD: APPLANIX POS M/V WITH RTK TIDES
MOTION COMPENSATION: APPLANIX OCEAN MASTER POS M/V
EQUIPMENT: ODOM CV300 SINGLE BEAM ECHOSOUNDER
SOFTWARE: HYPACK
VESSEL: 3058

29' Legend

0.0'
29.0'
30.0'
31.0'
32.0'
33.0'
33.0' +

0 100' 200'

CHANNEL LINE T.P.

CHTP	EAST X	NORTH Y
11N		240,452.19
1N	19,130,669.56	239,924.79
	19,131,176.86	239,306.17
3N	19,131,317.59	239,292.26
1S	19,130,653.57	238,354.07
2S	19,131,272.08	238,861.50
3S	19,131,412.81	238,847.62

CENTER LINE T.P.

CL TP	EAST X	NORTH Y
1F	19,130,638.69	239,191.03
2F	19,130,092.60	239,257.02

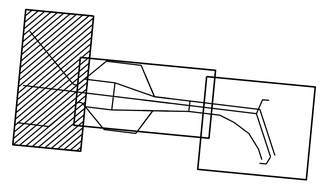

US Army Corps of Engineers®

MARK	DESCRIPTION	DATE

SURVEYED BY: E.D.S.
DRAWN BY: E.D.S.
REVIEWED BY:
APPROVED BY:
ISSUE DATE: 20-SEPT-2019
SOLICITATION NO.:
CONTRACT NO.:
DRAWING NUMBER:
SIZE: ANSI D
FILE NAME: Ludington prior 2019.dgn

U.S. ARMY CORPS OF ENGINEERS
DETROIT DISTRICT
477 MICHIGAN AVE
DETROIT, MI 48226

LAKE MICHIGAN AREA OFFICE
307 SOUTH HARBOR DR
GRAND HAVEN, MI 49417

LUDINGTON HARBOR
MICHIGAN

CONDITION OF CHANNEL
SEPTEMBER 2019

SHEET ID

VH101

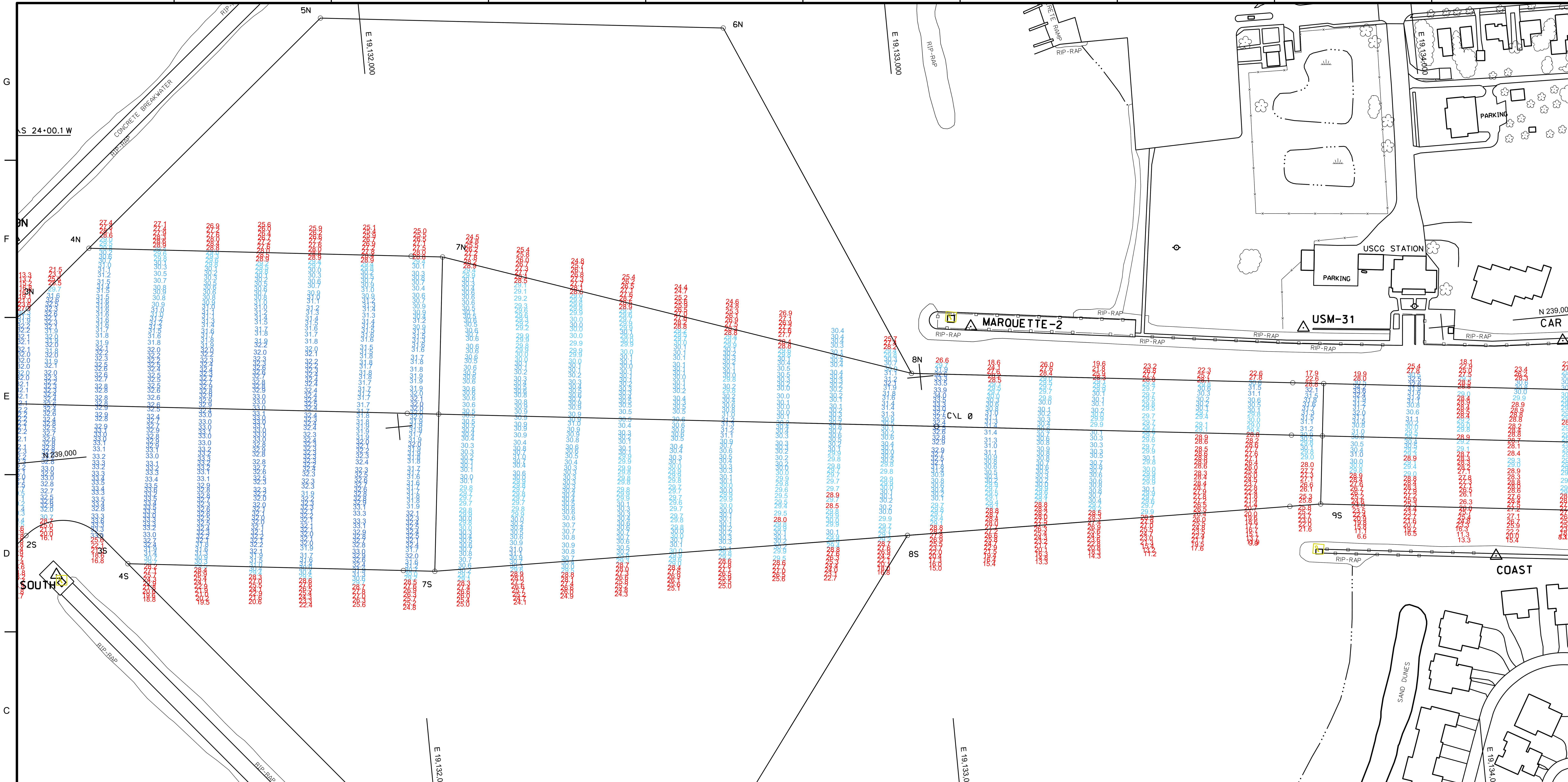

ALL SOUNDINGS ARE REFERENCED TO I.G.L.D. 1985 FOR LAKE MICHIGAN, ELEVATION 577.5 FT. ABOVE MEAN SEA LEVEL AT RIMOUSKI, QUEBEC.
HYDRAULIC CORRECTOR OF 0.3 APPLIED

GRID SYSTEM BASED ON LAMBERT PROJECTION, MICHIGAN STATE PLANE COORDINATE SYSTEM, CENTRAL ZONE (2112) 1983 NORTH AMERICAN DATUM, U.S. FOOT.

THE INFORMATION DEPICTED ON THIS MAP REPRESENTS THE RESULTS OF SURVEYS MADE ON THE DATES INDICATED AND CAN ONLY BE CONSIDERED AS INDICATING THE GENERAL CONDITIONS EXISTING AT THAT TIME.

SURVEYED ON: 20-SEPTEMBER-2019
VERTICAL WATER LEVEL MEASURED AT NOAA GAGE STATION
POSITIONING METHOD: APPLANIX POS M/V WITH RTK TIDES
MOTION COMPENSATION: APPLANIX OCEAN MASTER POS M/V
EQUIPMENT: ODOM CV300 SINGLE BEAM ECHOSOUNDER
SOFTWARE: HYPACK
VESSEL: 3058

29' Legend

0.0'
29.0'
30.0'
31.0'
32.0'
33.0'
34.0' +

CENTER LINE T.P.

T.P.	EAST X	NORTH Y
0	19,133,021.42	238,903.06

CHANNEL LINE T.P.

T.P.	EAST X	NORTH Y
2S	19,131,272.08	238,861.50
3N	19,131,317.59	239,292.26
3S	19,131,412.81	238,847.62
4N	19,131,443.97	239,395.89
4S	19,131,460.48	238,789.53
5N	19,131,925.71	239,790.96
6N	19,132,689.18	239,698.69
7N	19,132,114.24	239,314.88
7S	19,132,042.25	238,719.22
8N	19,132,983.78	239,008.34
8S	19,132,946.66	238,701.27
9S	19,133,737.41	238,685.58

0 100' 200'

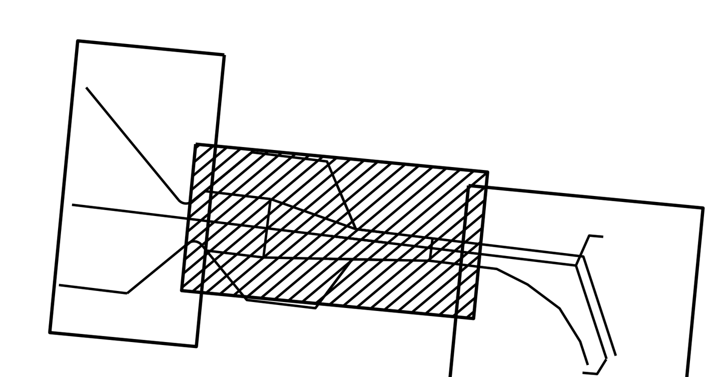

US Army Corps of Engineers®

MARK	DESCRIPTION	DATE

SURVEYED BY: E.D.S.
DRAWN BY: E.D.S.
REVIEWED BY:
APPROVED BY:
ISSUE DATE: 20-SEPTEMBER-2019
SOLICITATION NO.:
CONTRACT NO.:
DRAWING NUMBER:
SIZE: ANSI D
FILE NAME: Ludington prior 2019.dgn

U.S. ARMY CORPS OF ENGINEERS
DETROIT DISTRICT
477 MICHIGAN AVE
DETROIT, MI 48226

LAKE MICHIGAN AREA OFFICE
307 SOUTH HARBOR DR
GRAND HAVEN, MI 49417

LUDINGTON HARBOR
MICHIGAN

CONDITION OF CHANNEL
SEPTEMBER 2019

SHEET ID
VH102

ALL SOUNDINGS ARE REFERENCED TO I.G.L.D. 1985 FOR LAKE MICHIGAN, ELEVATION 577.5 FT. ABOVE MEAN SEA LEVEL AT RIMOUSKI, QUEBEC.
HYDRAULIC CORRECTOR OF 0.3 APPLIED

GRID SYSTEM BASED ON LAMBERT PROJECTION, MICHIGAN STATE PLANE COORDINATE SYSTEM, CENTRAL ZONE (2112) 1983 NORTH AMERICAN DATUM, U.S. FOOT.

THE INFORMATION DEPICTED ON THIS MAP REPRESENTS THE RESULTS OF SURVEYS MADE ON THE DATES INDICATED AND CAN ONLY BE CONSIDERED AS INDICATING THE GENERAL CONDITIONS EXISTING AT THAT TIME.

SURVEYED ON: 20-SEPTEMBER-2019
VERTICAL WATER LEVEL MEASURED AT NOAA GAGE STATION
POSITIONING METHOD: APPLANIX POS M/V WITH RTK TIDES
MOTION COMPENSATION: APPLANIX OCEAN MASTER POS M/V
EQUIPMENT: ODOM CV300 SINGLE BEAM ECHOSOUNDER
SOFTWARE: HYPACK
VESSEL: 3058

0 100' 200'

30' Legend

0.0'
30.0'
31.0'
32.0'
33.0'
34.0'
34.0' +

CENTER LINE T.P.

T.P.	EAST X	NORTH Y
1C	19,135,225.44	238,636.69
2C	19,135,536.28	237,686.20

CHANNEL LINE T.P.

T.P.	EAST X	NORTH Y
9N	19,135,300.68	238,728.33
10N	19,135,631.32	237,717.28
10S	19,134,419.38	238,603.16
11S	19,134,733.17	238,444.02
12S	19,135,059.21	238,199.30
13S	19,135,268.47	237,861.65
14S	19,135,346.18	237,624.03

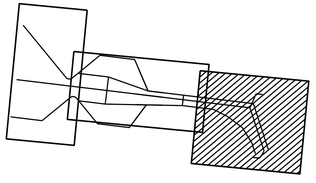

US Army Corps of Engineers®

MARK	DESCRIPTION	DATE

ISSUE DATE: 20-SEPT-2019
SOLICITATION NO.:
CONTRACT NO.:
DRAWING NUMBER:
SURVEYED BY: E.D.S.
DRAWN BY: E.D.S.
REVIEWED BY:
APPROVED BY:
SIZE: ANSI D
FILE NAME: Ludington prior 2019.dgn

U.S. ARMY CORPS OF ENGINEERS
DETROIT DISTRICT
477 MICHIGAN AVE
DETROIT, MI 48226

LAKE MICHIGAN AREA OFFICE
307 SOUTH HARBOR DR
GRAND HAVEN, MI 49417

LUDINGTON HARBOR
MICHIGAN

CONDITION OF CHANNEL
SEPTEMBER 2019

SHEET ID
VH103